Fig. 1

Jøtul F 100 ECO.2

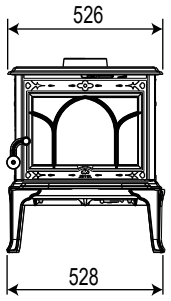

Min. distance to combustible wall

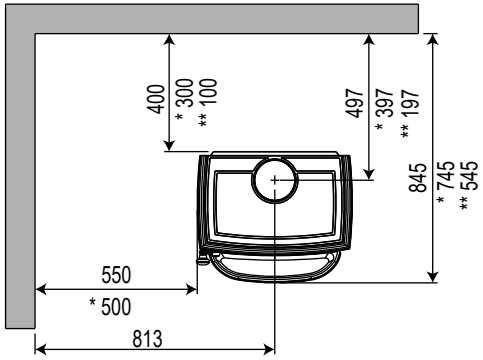

* With semi insulated flue pipe
** With semi insulated flue pipe and extra heathsield, rear

Min. distance to firewall

External firewall

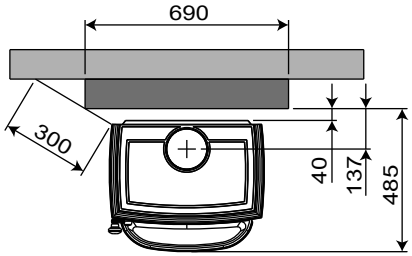

Integrated firewall

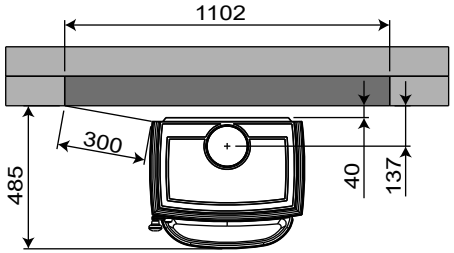

Jøtul F 100 ECO.2 LL (Long Legs)
Jøtul F 100 ECO.2 LL SE (Long Legs and Special Edition)

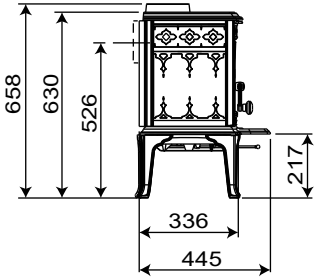

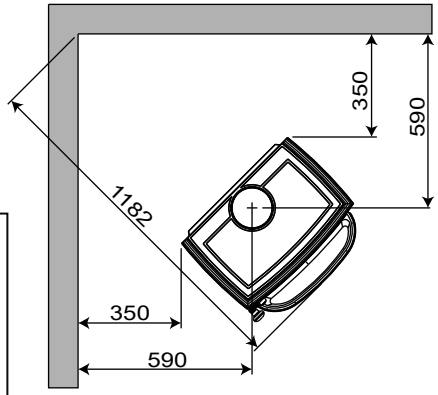

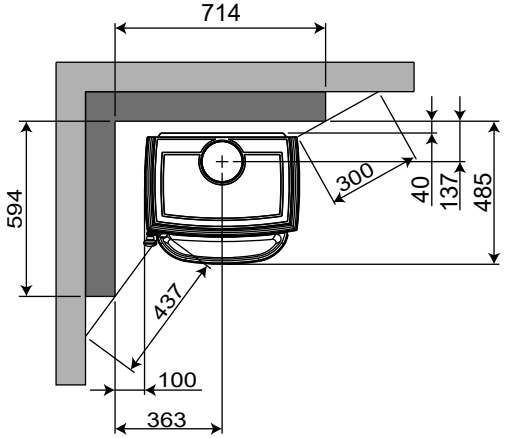

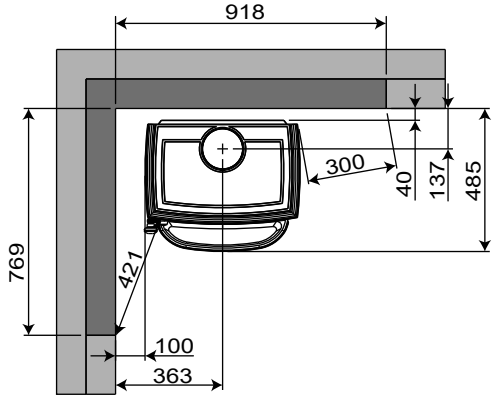

Jøtul F 100 ECO.2 SL (Short Legs) and
Jøtul F 100 ECO.2 SL SE (Short Legs and Special Edition)
The short legged version (Jøtul F 100 ECO.2 SL) can only be installed on a constructional hearth which must have an extension of minimum 350 mm in front of the stove.
For further information please see:
Approved Document J2010 Section 2.22.

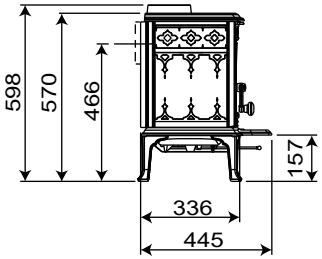

Floorplate

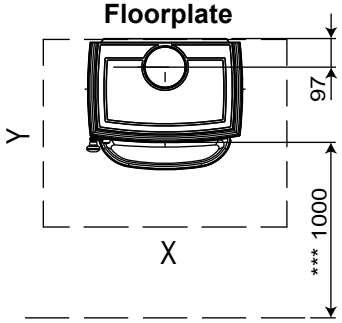

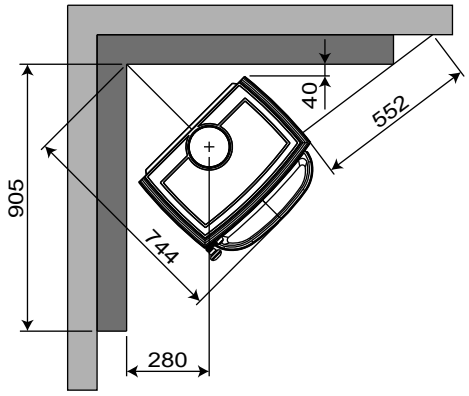

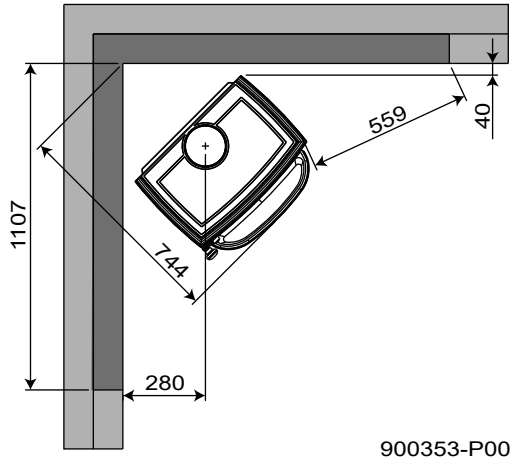

Combustible wall

Firewall

Min. measurements floorplate
X / Y= According to national laws and regulations
*** Min. distance to furniture / combustible material

900353-P00